INSTALLATION INSTRUCTIONS

SERVICE KIT - FLOW SWITCH REPLACEMENT KIT. Part No. 31777

- Monsoon Standard Single & Twin Pumps

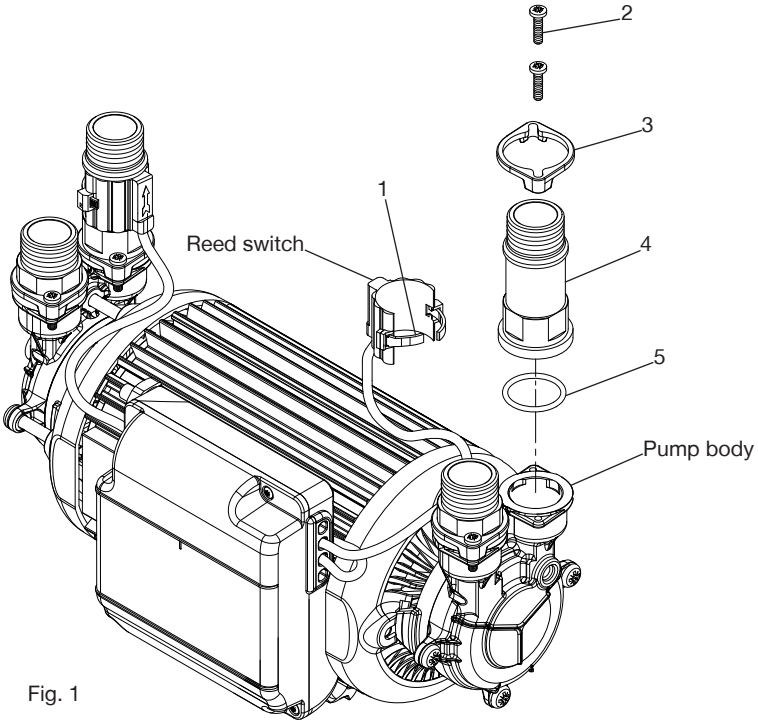

Fig. 1

- **KIT CONTENTS**

ITEM		QTY
1	Tie Wrap	1
2	Screw, M4 x 16	2
3	Manifold Clamp	1
4	Flow Switch Assembly (Standard)	1
5	'O'-Ring (ID 24.6 x 2.4 mm sec)	1

Cont ...

- **DISASSEMBLY**
  - Remove the existing reed switch by cutting the securing tie wrap (item 1).
  - Remove two screws (item 2) and remove manifold clamp (item 3).
  - Carefully remove the flow switch assembly (item 4).
  - Remove the ‘O’-ring (item 5) from between the flow switch assembly and pump body.

  Note: Magnet carrier and flow switch adaptor may separate from flow switch body during disassembly as shown in Fig. 2.

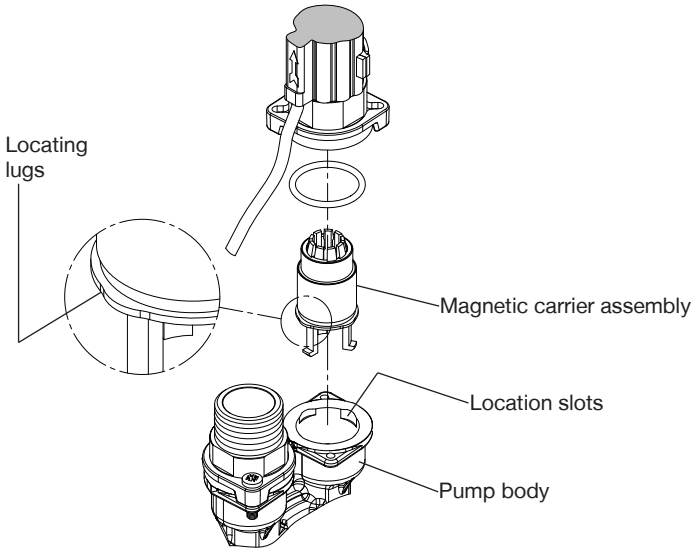

Fig. 2

  Damaged components must be replaced. Contact Stuart Turner for advice on replacements not supplied with kit.

- **REASSEMBLY**
  - Reassembly is the reverse of the disassembly instructions with the new replacement parts fitted as required.
  - Upon reassembly ensure the locating ‘lugs’ of the magnet carrier assembly, locate accordingly with the corresponding location slots in the pump body (Fig 2).
  - Secure manifold clamp screws, to a torque of 1.5 Nm (item 2).
  - For correct operation of the flow switch, the reed must be secured to the body (Fig. 4).
  - Firstly feed the tie wrap through the retainer on the reed switch, ensuring that the tie wrap serrations are facing outwards (Fig 3).

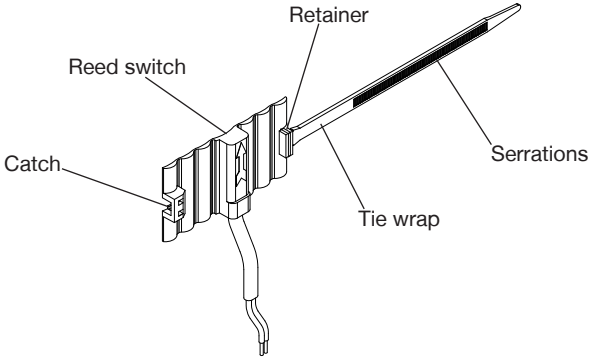

Fig. 3

Cont ...

- Locate the reed switch within the body groove as highlighted X-X (Fig. 4), and feed the tie wrap through the second catch.
- The tie wrap can now be pulled tight to secure the reed and the excess cut to length as shown (Fig. 5).

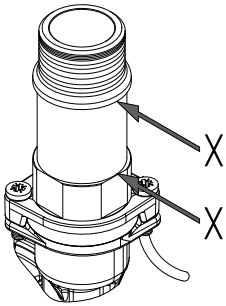

Fig. 4

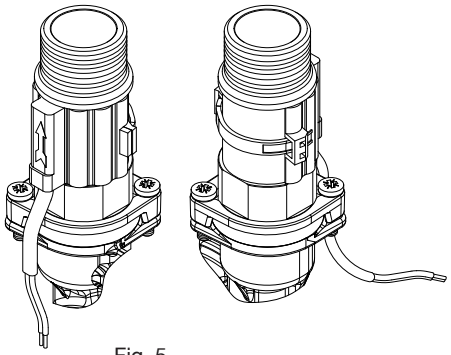

Fig. 5

- **INITIAL OPERATING INSTRUCTIONS**
  - Consult instruction manual for commissiong instructions.
  - Do not run pump dry. Allow the water to be pumped to enter the pump body thus ensuring the seal is lubricated before switching the pump on. Failure to do this will damage the seal.
  - Carefully check pump and pipework for leaks whilst pump running and stationary before leaving the installation unattended.

Stuart Turner Limited reserves the right to amend specifications without notice.

Cont ...

Stuart Turner Ltd, Henley-on-Thames, Oxfordshire RG9 2AD ENGLAND
Tel: +44 (0) 1491 572655, Fax: +44 (0) 1491 573704
info@stpumps.co.uk www.stuart-turner.co.uk

Pt. No. 19070 **Issue No: 1716/2-01**