AQUALISA
DOWNTOWN™

DT.BSMT.MB

BATH SHOWER MIXER TAP - MATT BLACK

DIMENSIONAL DRAWINGS

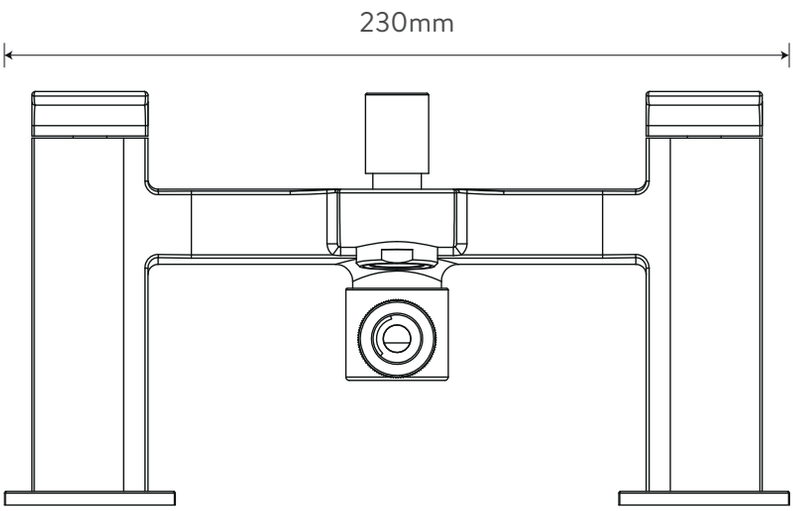

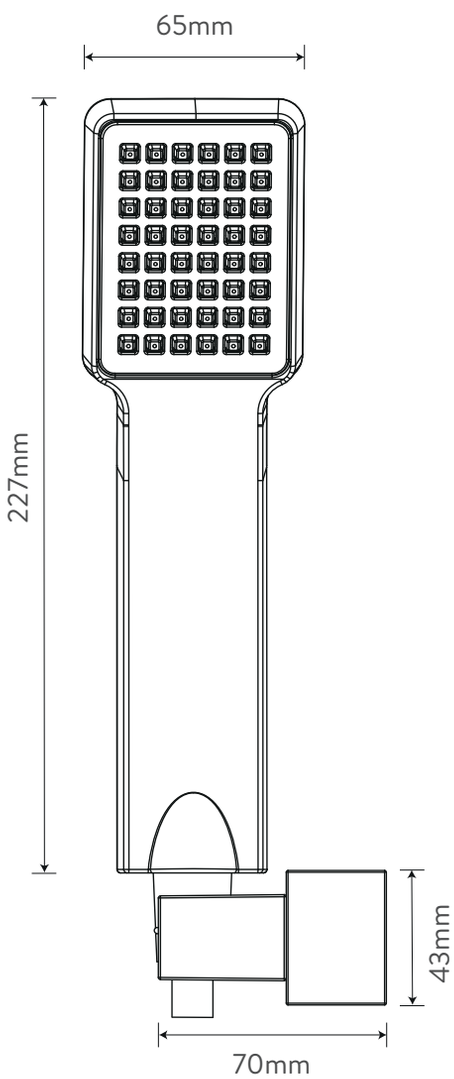

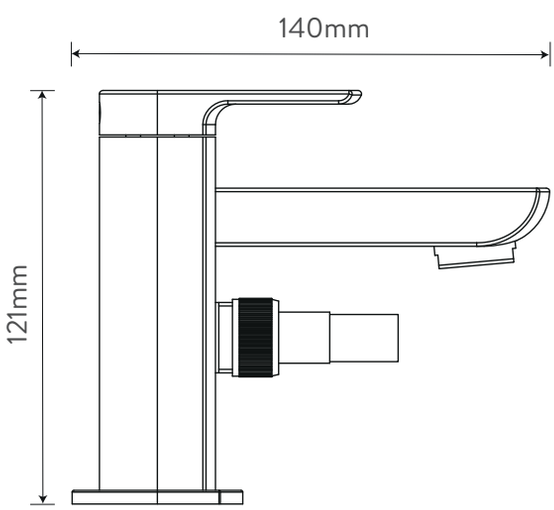

The company reserves the right to alter, change or modify the product or product specifications without prior warning.
Please refer to the installation guides for technical information.

Issue 01 Feb 2022

AQUALISA
DOWNTOWN™

DT.BSMT.MB

BATH SHOWER MIXER TAP - MATT BLACK

TECHNICAL SPECIFICATIONS

Minimum pressure requirements	0.2 bar
Maximum pressure requirements	5 bar
Inlet fitting connections	2 x 3/4” BSP male
Rear inlet supply positions	Hot/left, cold/right (as viewed from front)
Tap holes	2 holes
Handle type	Dual levers for hot and cold
Hose connection	1/2” BSP
Mounting type	Deck Mounted with wall mounted handset holder
Water system	Suitable for both low and high pressure systems
Features	Brass body with zinc handles
	Soft rub shower head nozzles for easy cleaning
	Supplied with a 65mm one function Square Shower handset
	1.25m Matt Black smooth hose
	Diverter which changes water flow from tap to shower handset
	Soft square design
Colour	Matt Black, RAL9005
Guarantee period	5 years (if the product is registered)

The company reserves the right to alter, change or modify the product or product specifications without prior warning.
Please refer to the installation guides for technical information.

Issue 01 Feb 2022