PUSH BUTTON
Installation Instructions

Components included in pack

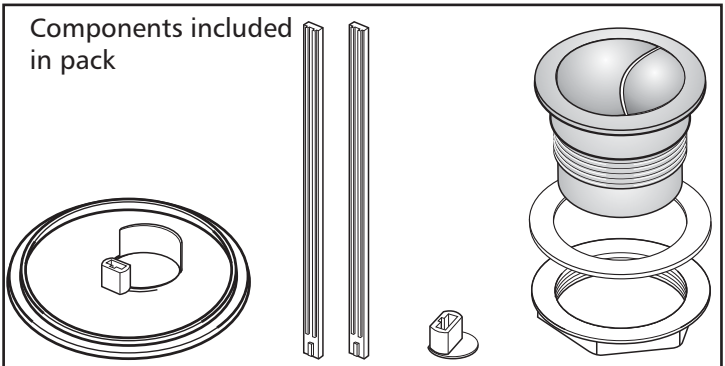

Plunger plate 1off | **Rods 2off** | **Rod boot 1off** | **Push button assembly 1off**

1

Push rod into plunger plate.

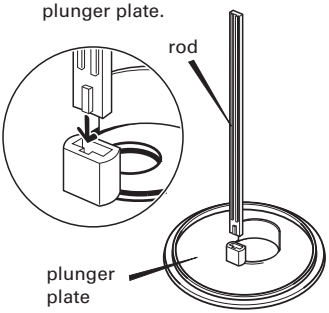

2

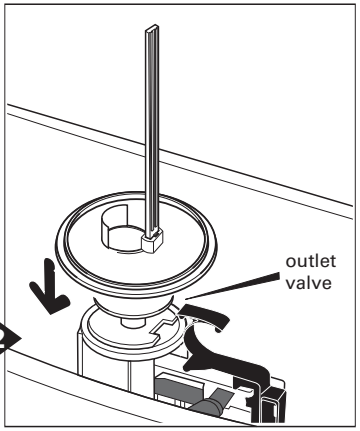

Place plunger plate on top of outlet valve.

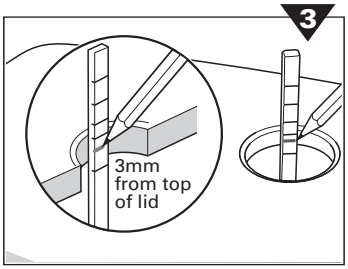

Place lid on cistern and mark rod height.
Remove rod from plunger plate
and cut to marked length -
(must be square cut)
Cut second rod to same length.

Fit bush, washer and nut
to cistern lid -
Ensure correct orientation of button
- large button on left when viewed
from front of the tank.

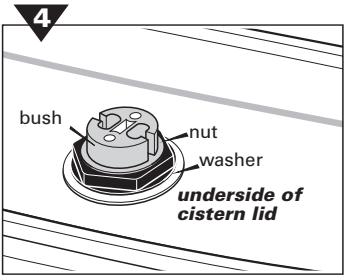

Push rod into plunger plate and push
fully into guide.
Assemble other rod and boot and
push fully into remaining guide.

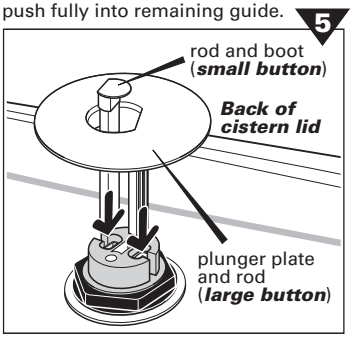

Place lid on cistern.
If rods are too long or not fully pushed
into plunger plate or boot, the outlet
valve will not operate correctly.

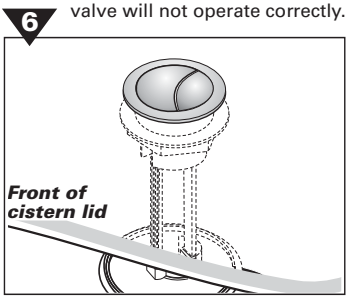

CUSTOMER CARE HELPLINE
0870 1296085
FAX LINE 01482 499611
email: ukcustcare@IdealStandard.com

We pursue a policy of continuing improvement in design and performance of our products. The right is, therefore, reserved to vary specifications without notice.

Ideal Standard (UK) Ltd. 4694 03/08